Dylan Tremblay

Santa Clara University

Electrical and Computer Engineering

Worksheet 1

range [ ] before

1. Carry lookahead adder

Complete the carry look-ahead adder blocks CLA-0, CLA-1, CLA-2, CLA-3

fixed only now

0110
+0100
1010

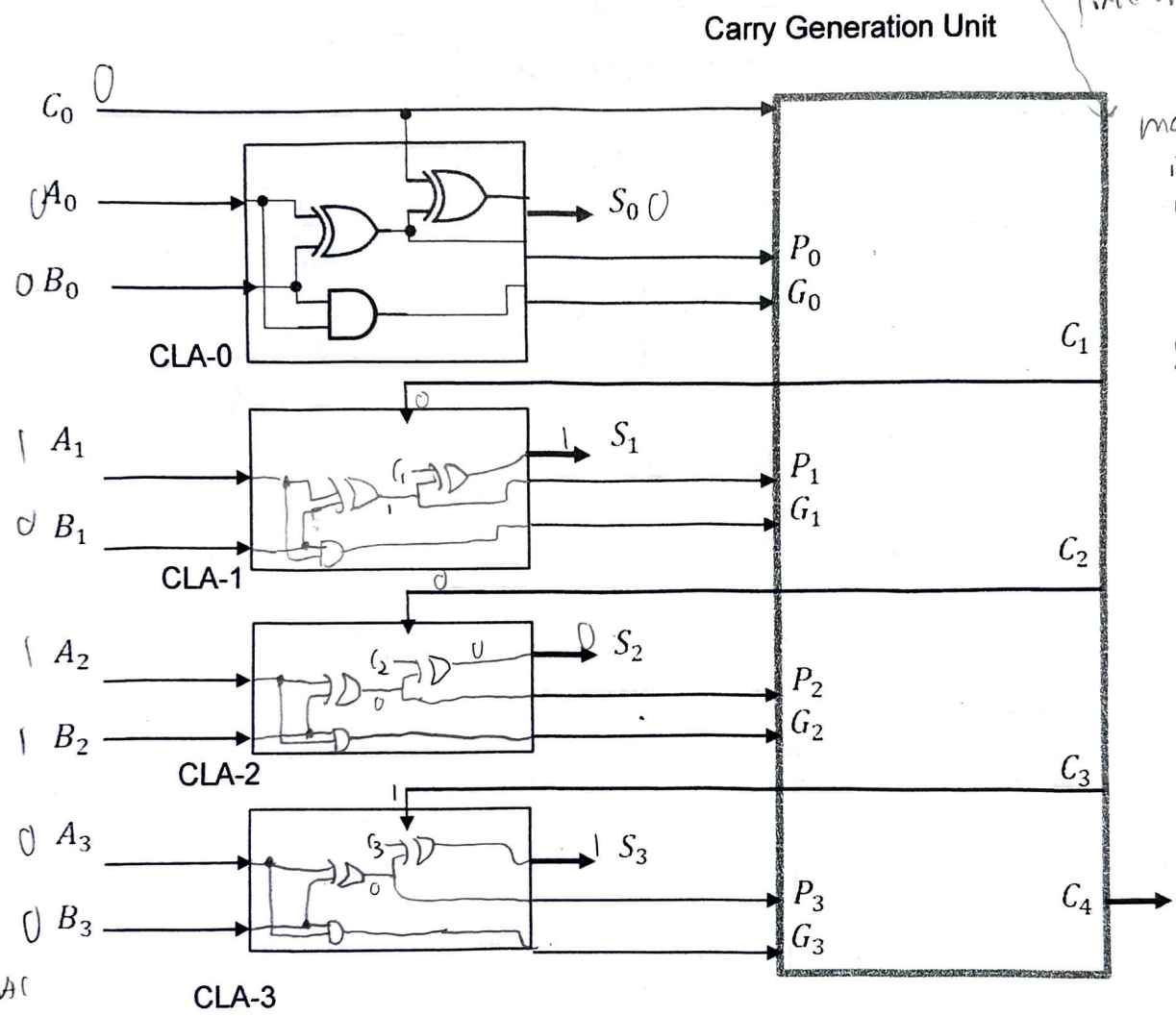

module carry-gen(
input C0,
input P[3:0],
input G[3:0],
output [3:0]C
S);

module CLA(
input A,
input B,
input C,
output P,
output G,
output S);

assign P = A^B;
S = P^C;
G = A&B;
endmodule

module CLA_total(
input C0,
input A[3:0],
input B[3:0],
output S[3:0],
output C[3:0]
);
wire P[3:0];
wire G[3:0];

CLA cla0(A[0], B[0], C0, P[0], G[0], S[0]);
repeat 3x
CLA cla3[A[3], B[3], C[2], P[3], G[3], S[3]];

carry-gen numl(C0, P, G, C);

Complete the carry generate unit schematic:

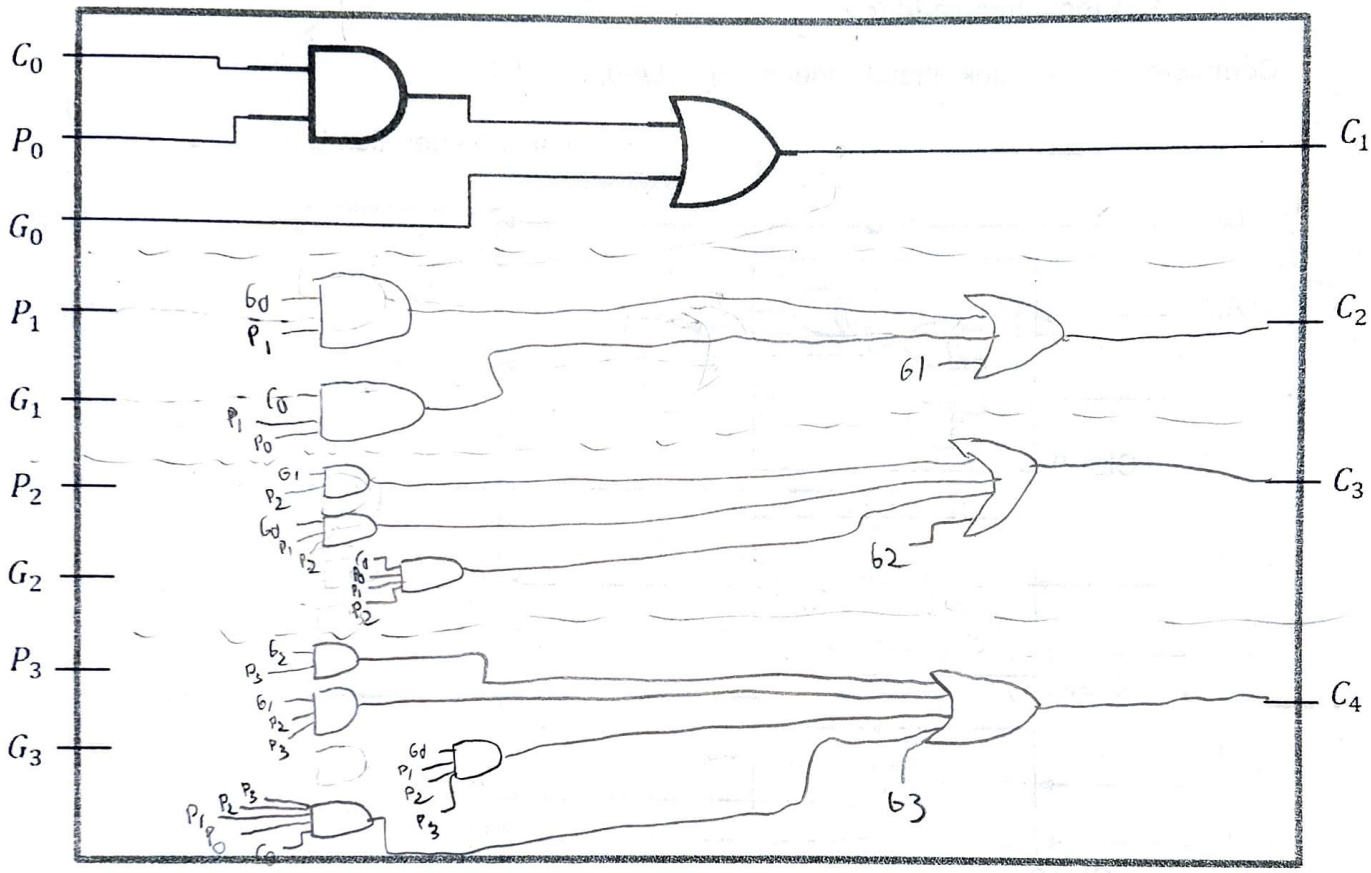

Depth = $\log_k(n+1)$

n = # of bits in input

k = fan-in of gate

this is same as starting

$(C_{i-1} \& P_i) \mid G_i$

$C2 = G1 + G0P1 + C0P1P0$

$C2 = C1P1 + G1$

$C1 = C0P0 + G0$

$P1((C0P0 + G0) + G1$

$C0P1P0 + P1G0 + G1$

matches

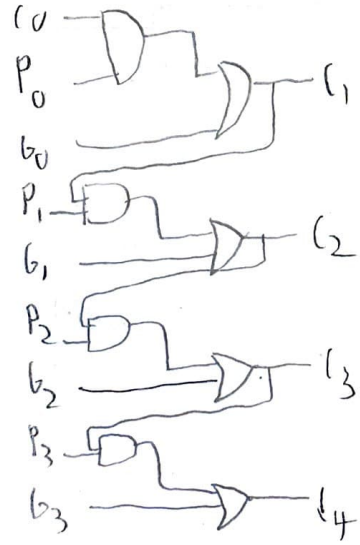

2. Carry-save adder

Complete the schematic to add four 4-bit numbers $W = w_3\, w_2\, w_1\, w_0$, $X = x_3\, x_2\, x_1\, x_0$, $Y = y_3\, y_2\, y_1\, y_0$, and $Z = z_3\, z_2\, z_1\, z_0$ using two 4-bit carry-save adders and 4-bit one carry-propagate adder.

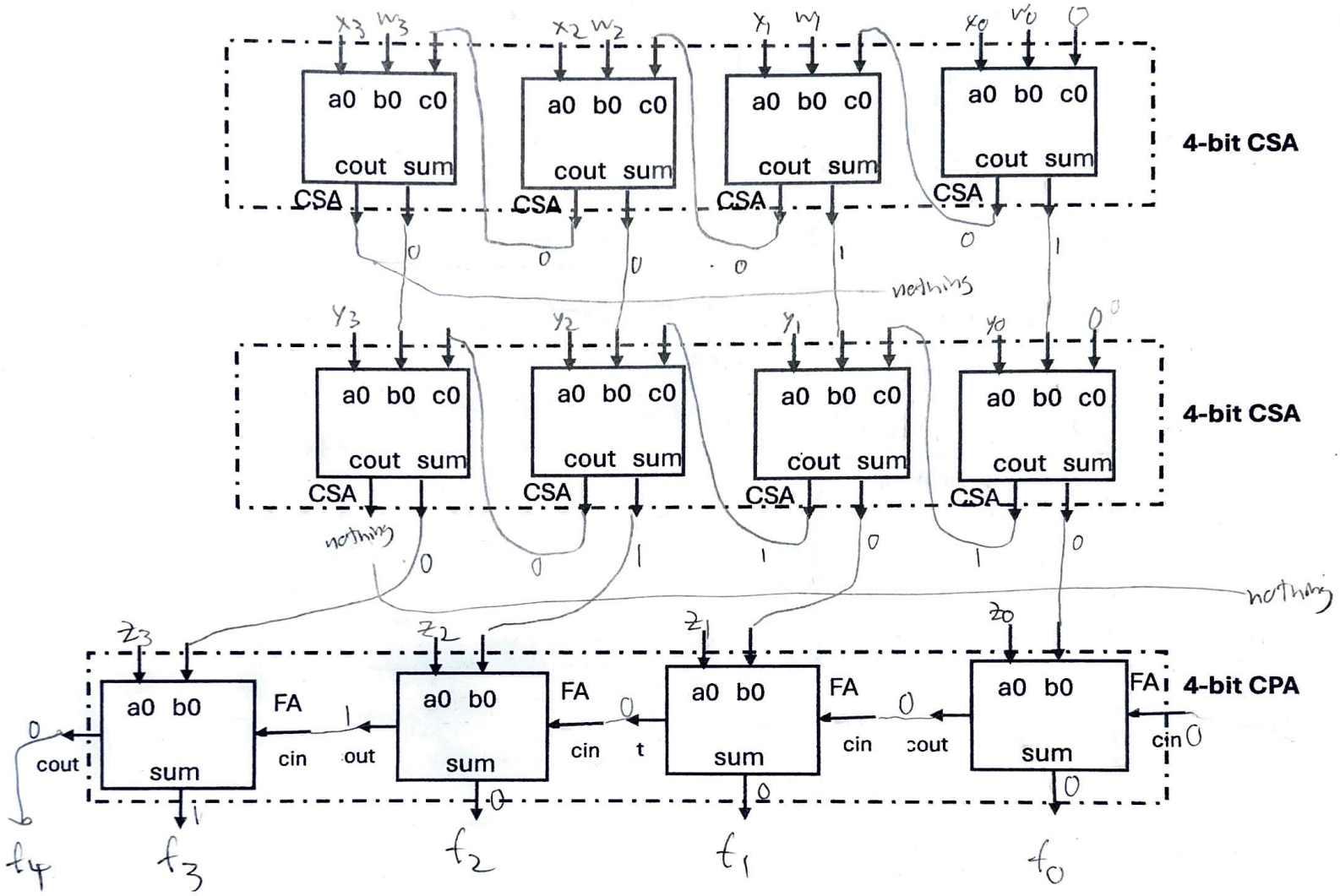

test: 0001 → w
0010 → x
0001 → y
0100 → z
1000
expect!